LCD Module Technical Specification

First Edition
Jan.07, 2016

Final Revision

Type No. **F-56015GNB-LW-AFN**

Customer : **********

Customer's Product No : **********

KYOCERA Display Corporation

Approved: Teruo Kuragane
QUALITY ASSURANCE DIVISION

Checked: Zheng Guo
China Design

Prepared: Yujiang Tang
China Design

APPROVED

By _____

Signature :
Date :

Please return this specification within two month with your signature.
If not returned within two month, specification will be considered
as having been accepted.

Table of Contents

Revision History

Rev.	Date	Page	Comment

1. Application

This specification applies to STN-LCD module (**F-56015GNB-LW-AFN**).

2. General Specifications

Dot Pixels	:	320 (W) × 240 (H) dots
Dot Size	:	0.345 (W) × 0.345 (H) mm
Dot Pitch	:	0.36 (W) × 0.36 (H) mm
Viewing Area	:	120.0 (W) × 90.0 (H) mm
Outline Dimensions	:	143.3* (W) × 109.0** (H) × 11.0 max. (D) mm * Without Hook **Without Flat Cable
Weight	:	265g max.
LCD Type	:	NTD-27309 STN / Blue-mode / Transmissive
Viewing Direction	:	6:00
Data Transfer	:	4-bit parallel data transfer
Backlight	:	LED Backlight / White
RoHS regulation	:	This product corresponds to meet RoHS regulation. RoHS regulation does not apply 6 hazardous materials above criteria.

3. Operating Conditions

Item	Conditions	Temperature Range	Remark
Operating Temperature Range	PNL Surface	0～60°C	Note1
Storage Temperature Range	PNL Surface	–20～70°C	

Note1: Operating temperature range defines the operation only and the contrast, response time and other display optical characteristics are set at Ta=+25°C.

4. Dimensional Outline

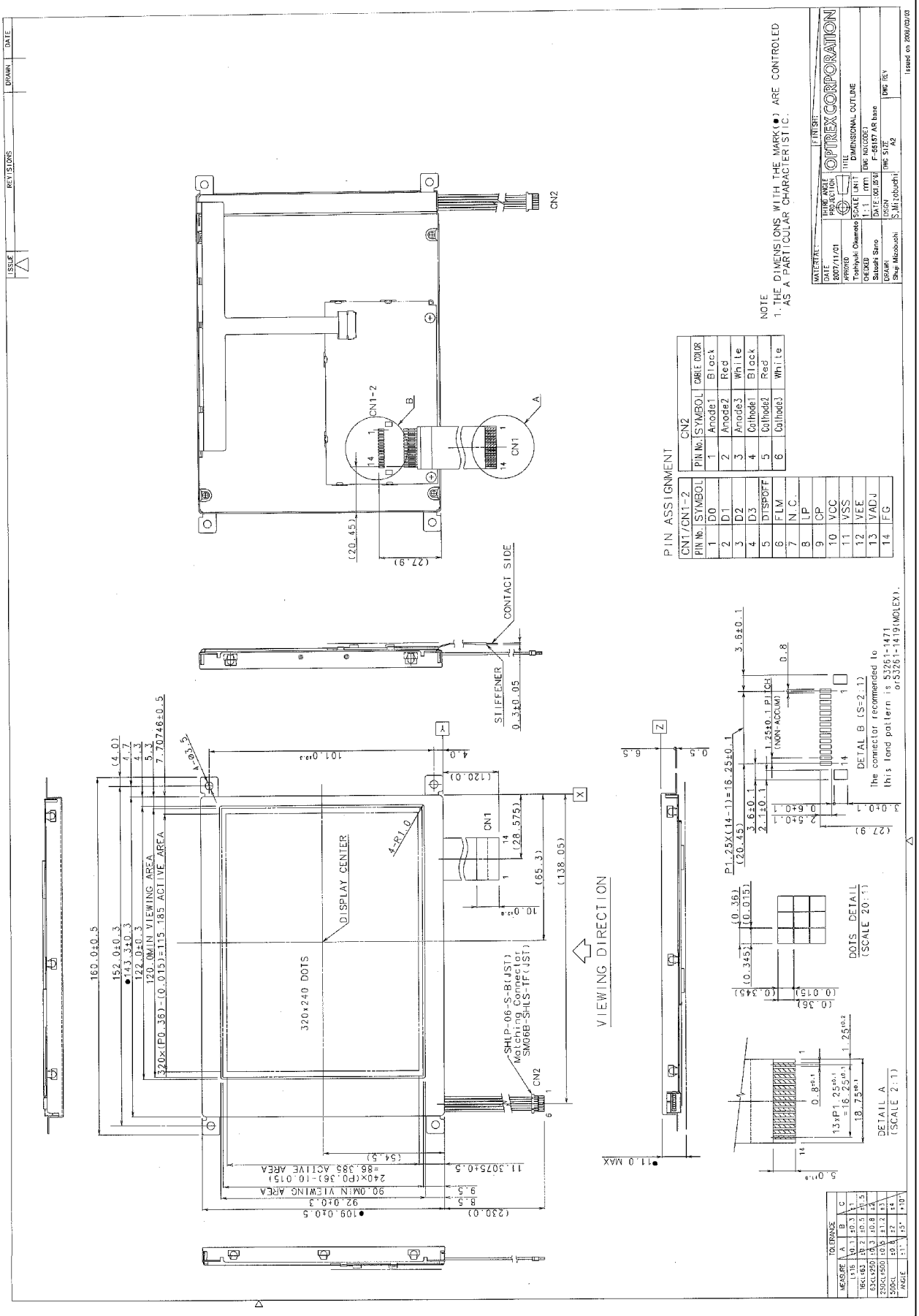

5. Block Diagram

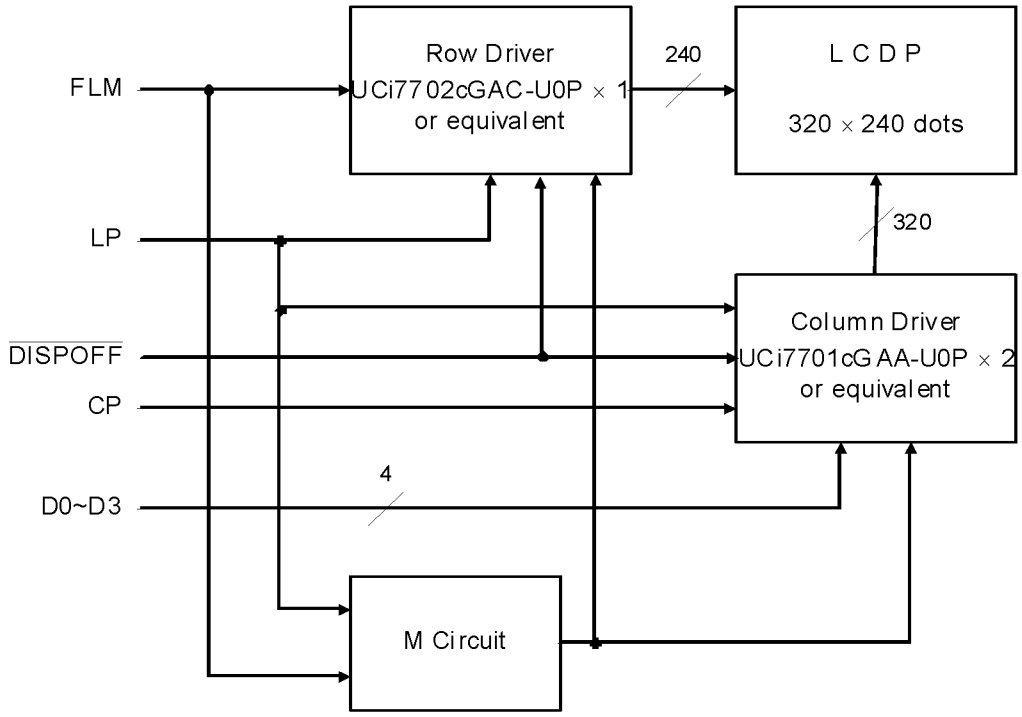

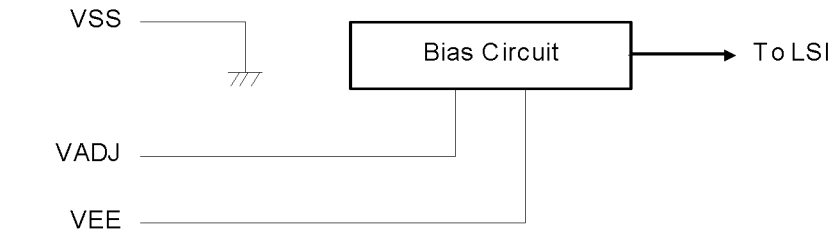

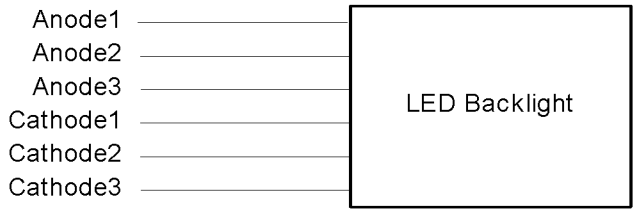

6. I/O Terminal

6.1. CN1 Pin Assignment

No.	Symbol	Functional Description
1	D0	Display Data
2	D1	Display Data
3	D2	Display Data
4	D3	Display Data
5	$\overline{\text{DISPOFF}}$	Display Control Signal H : Display on L : Display off
6	FLM	First Line Marker
7	N.C.	Non-connection
8	LP	Data Latch Signal
9	CP	Clock Signal for Shifting Data
10	VCC	Power Supply for Logic
11	VSS	Power Supply (0V, GND)
12	VEE	Power Supply for LCD Drive
13	VADJ	Voltage Level for LCD Contrast Adjustment
14	FG	Frame Ground

6.2. CN2 Pin Assignment

No.	Symbol	Functional Description
1	Anode 1	LED Anode Terminal
2	Anode 2	LED Anode Terminal
3	Anode 3	LED Anode Terminal
4	Cathode 1	LED Cathode Terminal
5	Cathode 2	LED Cathode Terminal
6	Cathode 3	LED Cathode Terminal

7. Electrical Specifications

7.1. Absolute Maximum Ratings

Ta=0~60°C, VSS=0V

Parameter	Symbol	Conditions	Min.	Max.	Units
Supply Voltage(Logic)	VCC	-	-0.3	7.0	V
Supply Voltage(LCD Drive)	VEE	-	-0.3	45	V
Input Voltage	V_{IN}	-	-0.3	VCC+0.3	V

7.2. DC Characteristics

Ta=0~60°C, VSS=0V

Parameter	Symbol	Conditions	Min.	Typ.	Max.	Units
Supply Voltage(Logic)	VCC	-	4.5	5.0	5.5	V
Supply Voltage(LCD Drive)	VADJ	-	-	21.2	-	V
"High" Level Input Voltage	V_{IH}	-	0.8VCC	-	-	V
"Low" Level Input Voltage	V_{IL}	-	-	-	0.2VCC	V
"High" Level Output Voltage	V_{OH}	I_{OH}=-04mA	VCC-0.4	-	-	V
"Low" Level Output Voltage	V_{OL}	I_{OL}=0.4mA	-	-	0.4	V
Supply Current	IDD	VCC-VSS=5.0V	-	0.4	0.6	mA
	IEE	VADJ-VSS=21.2V	-	4.5	6.75	mA

7.3.AC Characteristics

Parameter	Symbol	Min.	Max.	Units
Shift clock Period	t_{WCK}	71	—	ns
Shift Clock "H" Pulse Width	t_{WCKH}	23	—	ns
Shift Clock "L" Pulse width	t_{WCKL}	23	—	ns
Data Set Up time	t_{DS}	10	—	ns
Data Hold Time	t_{DH}	20	—	ns
Latch Pulse "H" Pulse width	t_{WLPH}	23	—	ns
Shift Clock Rise to Latch Pulse Rise Time	t_{LD}	0	—	ns
Shift Clock Fall to Latch Pulse Fall Time	t_{SL}	25	—	ns
Latch Pulse Rise to Shift Clock Rise Time	t_{LS}	25	—	ns
Latch Pulse Fall to Shift Clock Fall Time	t_{LH}	25	—	ns
Input Signal Rise Time, Fall Time	t_r, t_f	—	50 Note.1	ns
DISPOFF Removal Time	t_{SD}	100	—	ns
DISPOFF "L"Pulse width	t_{WDL}	1.2	—	us
Output Delay Time	t_{DL}		200 Note.2	ns

Note1 : (tck-twckll-twckl)/2 is the maximum in case of high speed operation.

Note2 : CL=15pF

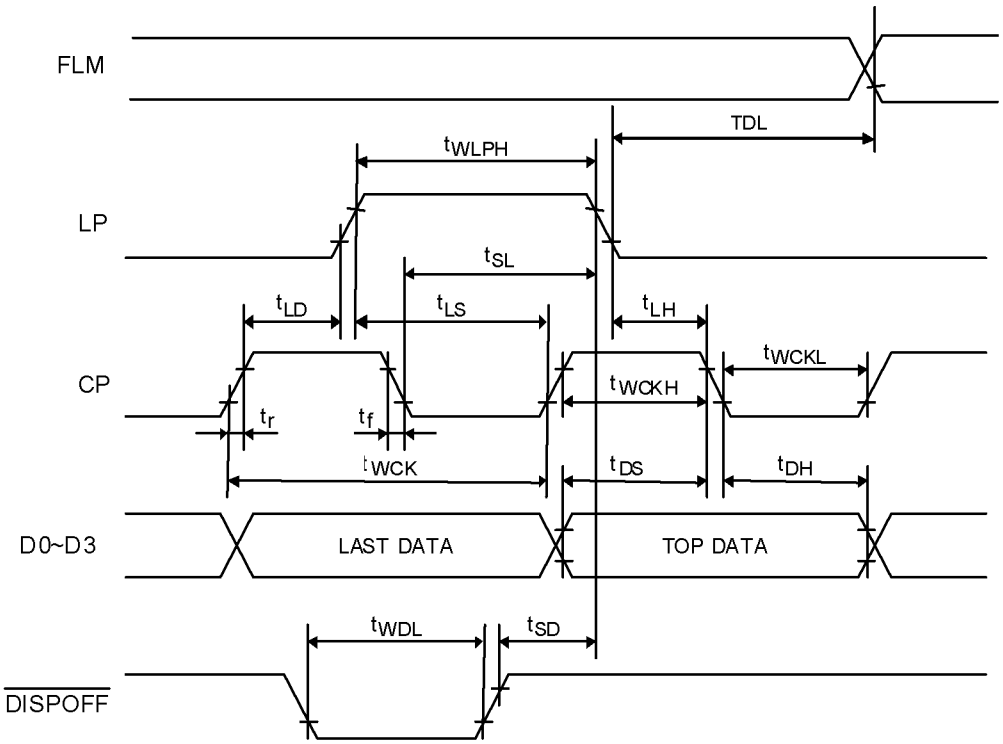

7.4.Timing Chart

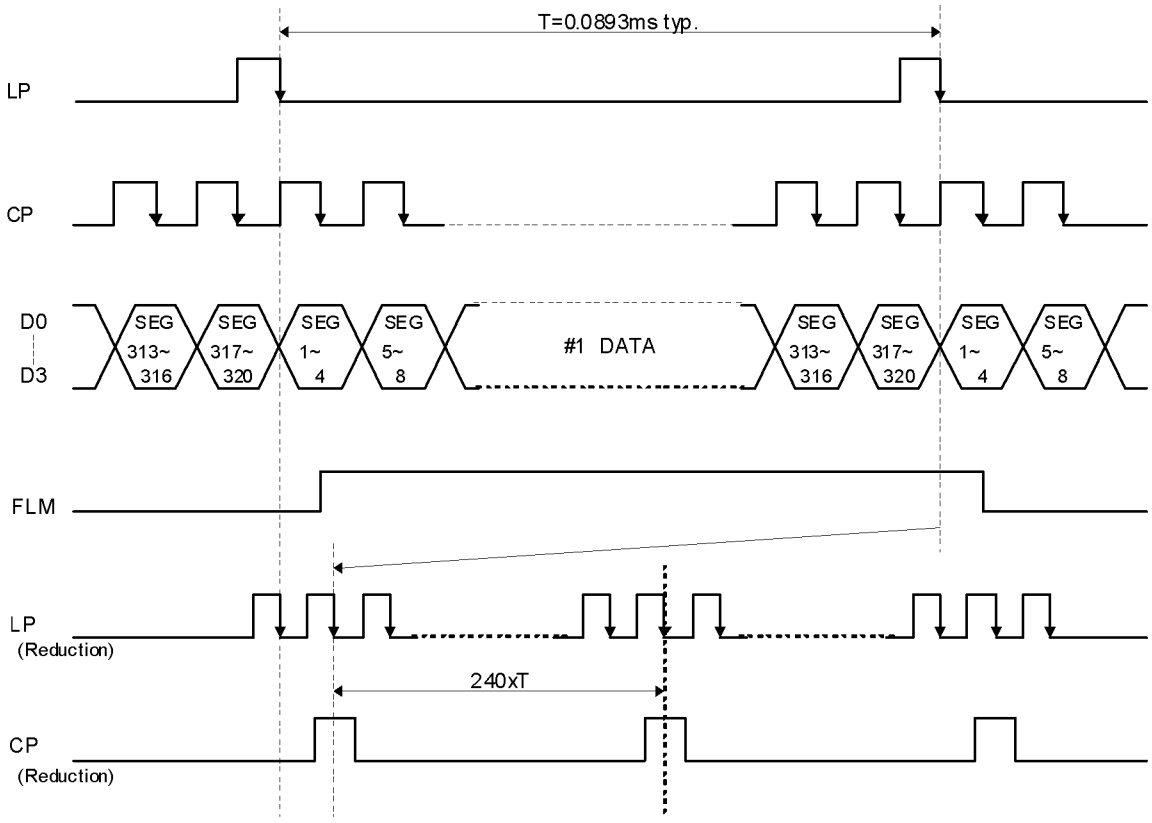

7.5.Exsample of Timing Chart

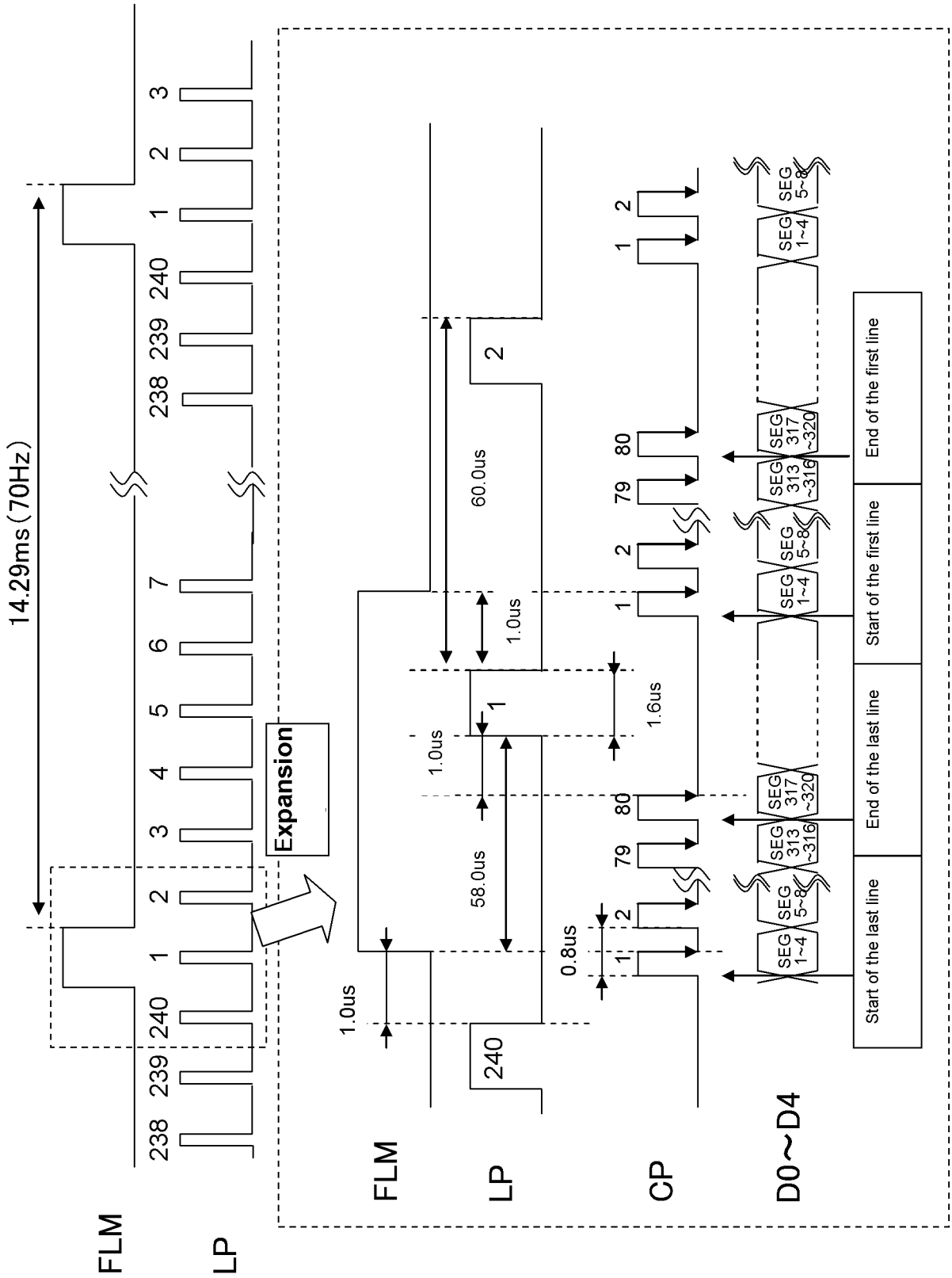

Note: These are the referrence value which exemplified above.
Please use the module after sufficient evaluation.

7.6.Comparison of Display and Data

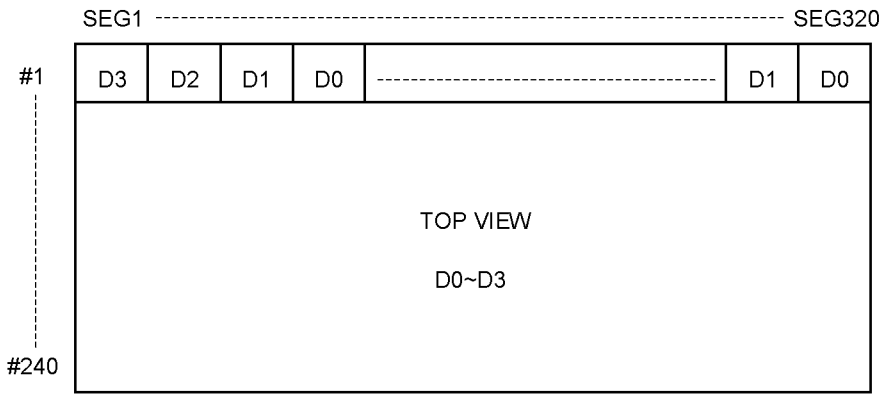

7.7.Recommended External Circuit

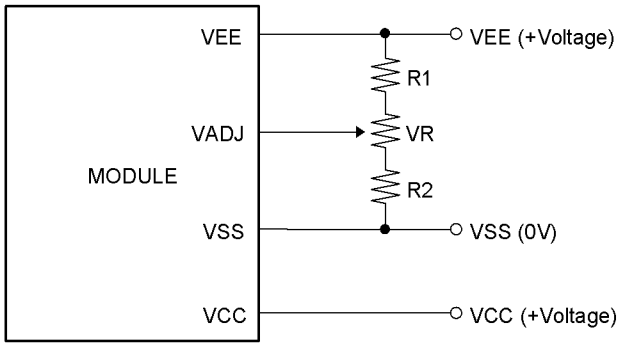

R1+R2+VR=10~ 20KΩ

7.8.Power Supply ON/OFF Sequence

7.8.1.ON Sequence

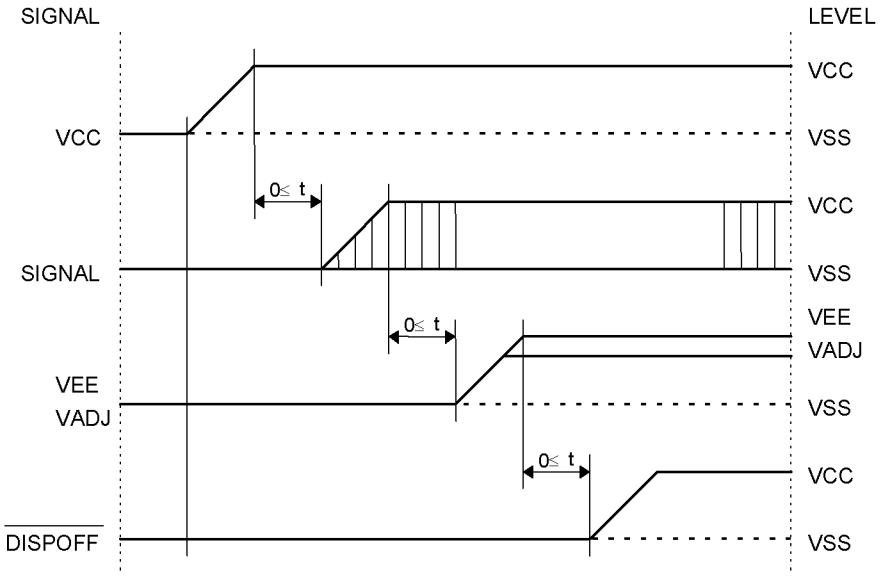

7.8.2.OFF Sequence

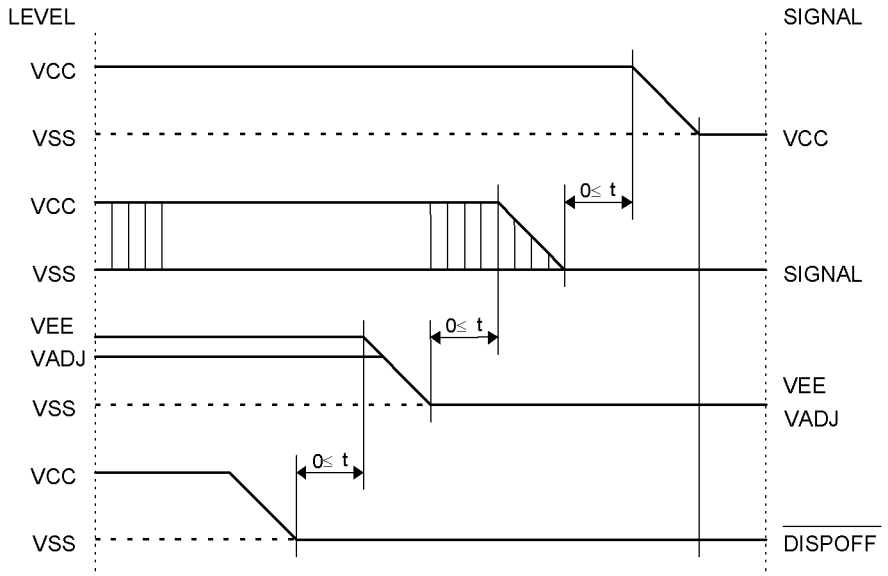

Please maintain the above sequence when turning on and off the power supply of the module.
If $\overline{\text{DISPOFF}}$ is supplied to the module while internal alternate signal for LCD driving (M) is unstable, DC component will be supplied to the LCD panel. This may cause damage the LCD module.

7.9.Lighting Specifications

7.9.1.Absolute Maximum Ratings

Ta=25°C

Parameter	Symbol	Conditions	Min.	Typ.	Max.	Units
Forward Current	I_F	Note 2	-	-	25	mA
Reverse Voltage	V_R	-	-	-	15	V
LED Power Dissipation	P_D	-	-	-	264	mW

Note 1 : This value is for each 1 line.

Note 2 : Refer to the foward current derating curve.

【Foword Current Derating Curve】

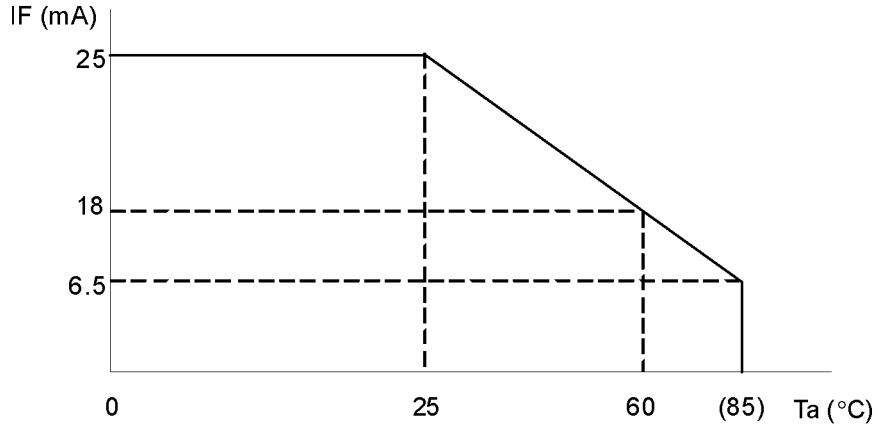

【LED Circuit】

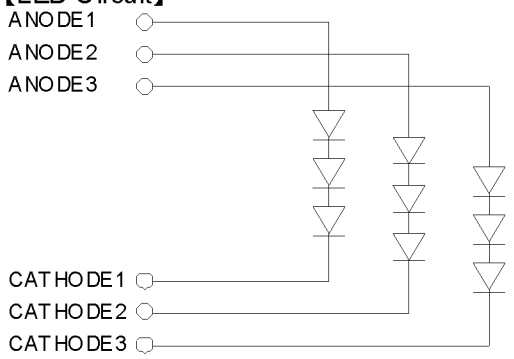

7.9.2.Operating Characteristics

Ta=25°C

Parameter	Symbol	Conditions	Min.	Typ.	Max.	Units
Forward Current	I_F	-	-	20	25	mA
Forward Voltage	V_F	I_F=20mA / 1 line	-	9.6	-	V
Luminance of Module Surface	L	I_F=20mA / 1 line	-	150	-	cd/m^2

8. Optical Specifications

8.1. LCD Driving Voltage

Parameter	Symbol	Conditions	Min.	Typ.	Max.	Units
Recommended LCD Driving Voltage Note 1	VADJ-VSS	Ta= 0°C	-	-	22.7	V
		Ta=25°C	19.7	21.2	22.7	V
		Ta=60°C	18.1	-	-	V

Note 1 : Voltage (Applied actual waveform to LCD Module) for the best contrast.
The range of minimum and maximum shows tolerance of the operating voltage.
The specified contrast ratio and response time are not guaranteed over the entire range.

8.2. Optical Characteristics

Ta=25°C, 1/240 Duty, 1/14 Bias, V_{OD}=21.2V (Note 4), θ= 0°, ϕ=-°

Parameter		Symbol	Conditions	Min.	Typ.	Max.	Units
Contrast Ratio Note 1		CR	θ= 0°C , ϕ=-°	-	5	-	
Viewing Angle			Shown in 8.3				
Response Time	Rise Note 2	T_{ON}	-	-	200	300	ms
	Decay Note 3	T_{OFF}	-	-	100	200	ms

Note 1 :Contrast ratio is definded as follows. (CR = L_{ON} / L_{OFF})
L_{ON} : Luminance of the ON segments
L_{OFF}: Luminance of the OFF segments
Note 2 :The time that the luminance level reaches 90% of the saturation level from 0% when ON signal is applied.
Note 3 :The time that the luminance level reaches 10% of the saturation level from 100% when OFF signal is applied.
Note 4 :Definition of Driving Voltage V_{OD}
Assuming that the typical driving waveforms shown below are applied to the LCD Panel at 1/A Duty - 1/B Bias (A: Duty Number, B: Bias Number). Driving voltage V_{OD} is definded as the voltage V_{O-P} when the contrast ratio (CR=L_{ON} / L_{OFF}) is at its maximum.

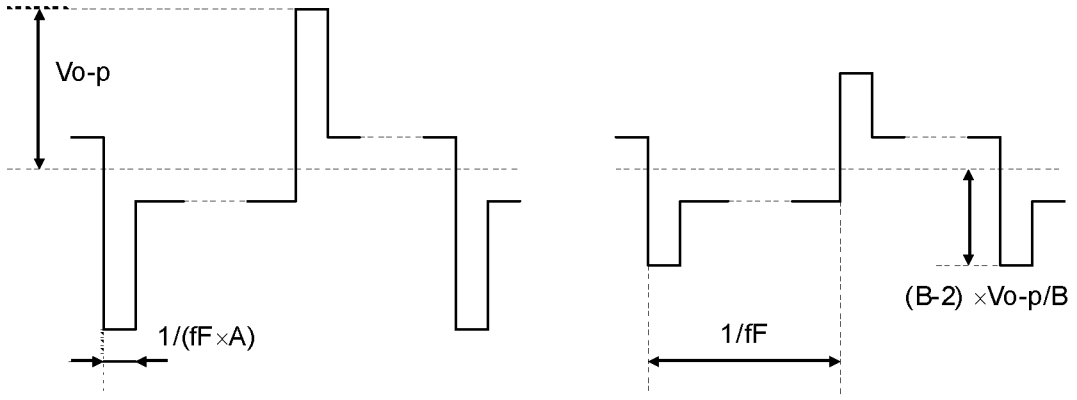

<ON SIGNAL> <OFF SIGNAL>

8.3. Definition of Viewing Angle and Optimum Viewing Area

*Point • shows the point where contrast ratio is measured. : θ= 0°, ϕ= -°
*Driving condition: 1/240 Duty, 1/14 Bias, V_{OD}= 21.2V, fR=70Hz

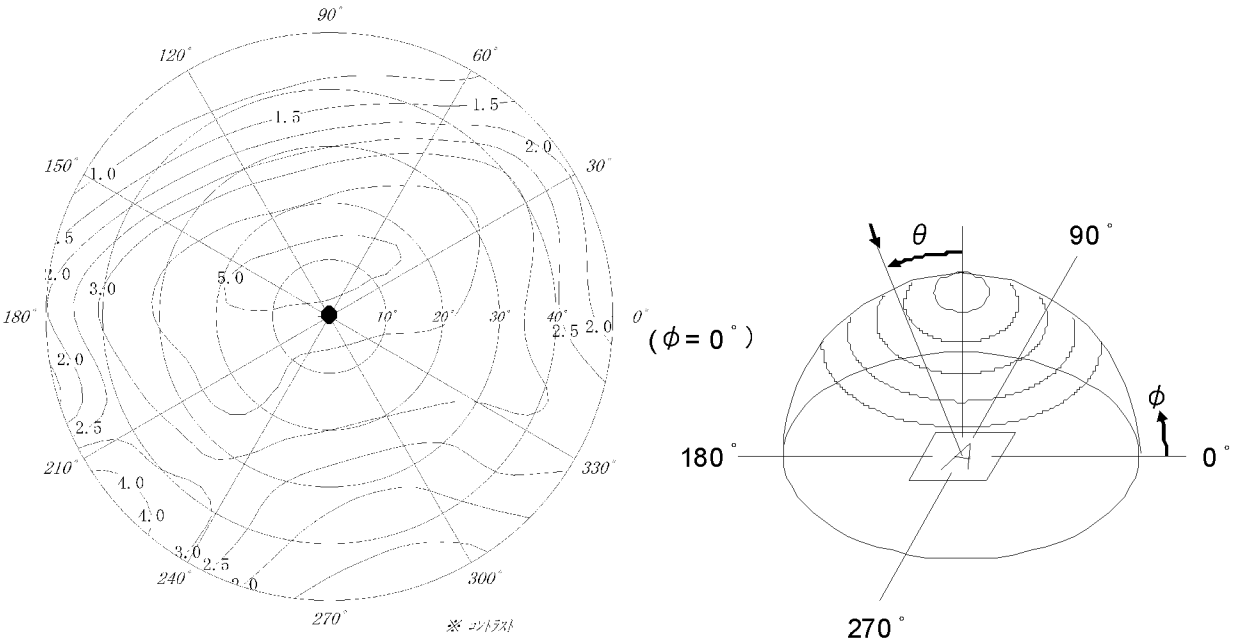

*Area shows typ. CR≥2.0

8.4. System Block Diagram

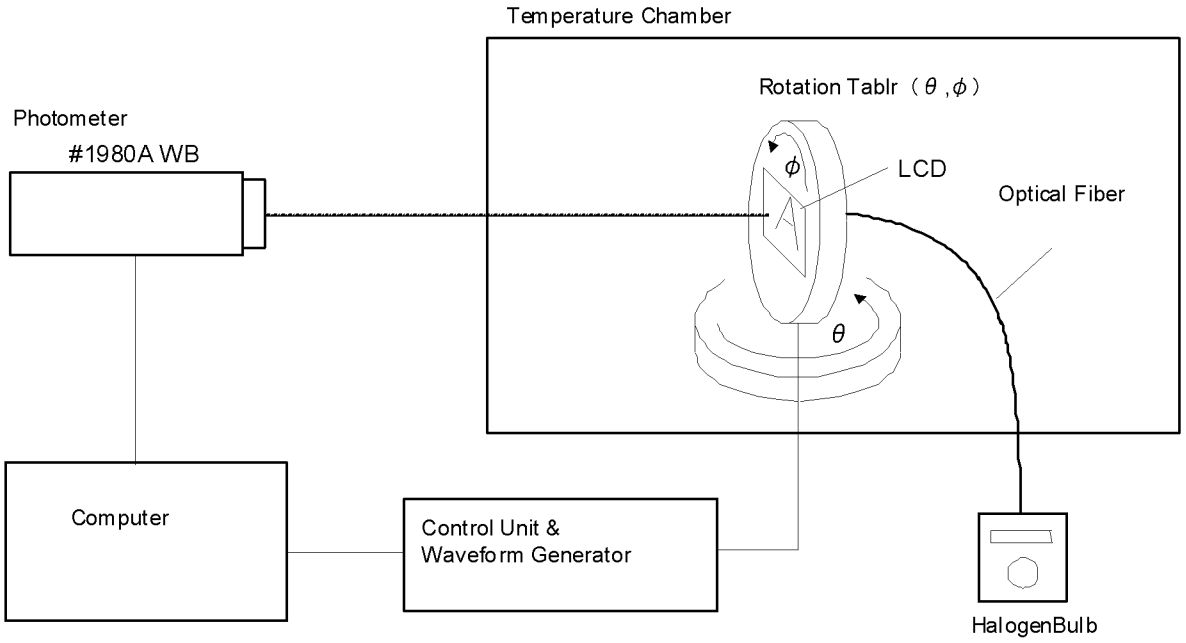

9. Test

No abnormal function and appearance are found after the following tests.

Conditions: Unless otherwise specified, tests will be conducted under the following condition.
Temperature: 20±5°C, Humidity: 65±5%RH
tests will be not conducted under functioning state.

No.	Parameter	Conditions	Notes
1	High Temperature Operating	60°C±2°C, 96hrs (operation state)	
2	Low Temperature Operating	0°C±2°C, 96hrs (operation state)	
3	High Temperature Storage	70°C±2°C, 96hrs	2
4	Low Temperature Storage	-20°C±2°C, 96hrs	2
5	Damp Proof Test	40°C±2°C,90~95%RH, 96hrs	1,2
6	Vibration Test	Total fixed amplitude : 1.5mm Vibration Frequency : 10~55Hz One cycle 60 seconds to 3 directions of X, Y, Z for each 15 minutes	3
7	Shock Test	To be measured after dropping from 60cm high on the concrete surface in packing state. 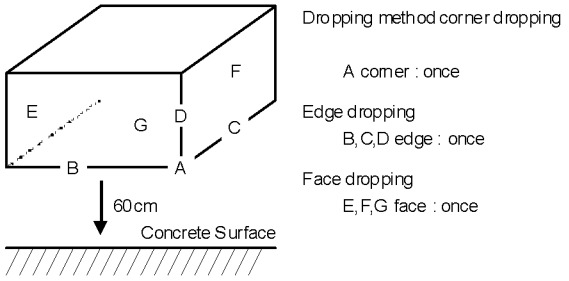 	

Note 1 :No dew condensation to be observed.
Note 2 :The function test shall be conducted after 4 hours storage at the normal Temperature and humidity after removed from the test chamber.
Note 3 :Vibration test will be conducted to the product itself without putting it in a container.

10. Appearance Standards

10.1. Inspection conditions

The LCD shall be inspected under 40W white fluorescent light.
The distance between the eyes and the sample shall be more than 30cm.
All directions for inspecting the sample should be within 45°against perpendicular line.

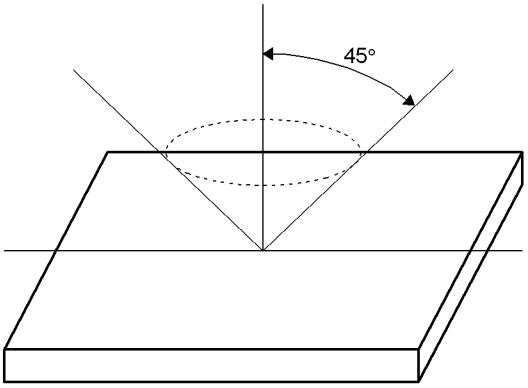

10.2. Definition of applicable Zones

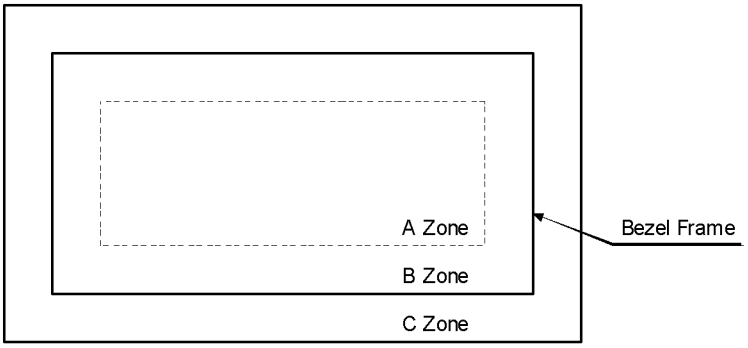

A Zone : Active display area
B Zone : Area from outside of "A Zone" to validity viewing area
C Zone : Rest parts

A Zone + B Zone = Validity viewing area

10.3.Standards

D = (Long + Short) / 2 * : Disregard units : mm

No.	Parameter	Criteria
1	The Shape of Dot	(1) Pin Hole

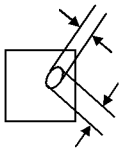

Dimension	Acceptable Number
D ≤ 0.10	*
0.10 < D ≤ 0.20	1 pc / dot or less 5 pcs / cell or less

(2) Breakage or Chips / Deformation

1. 1 Dot Type

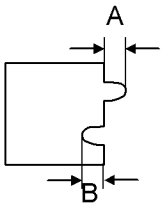

Dimension	Acceptable Number
A≤0.10	* (Should not be connected to next dot)
0.10<A≤0.15	1 pc / dot(only segment)or less 5 pcs / cell or less (Should not be connected to next dot)
B ≤ 0.15	*

2. Defective type extends over multiple numbers of

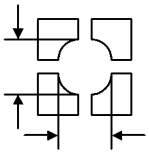

Dimension	Acceptable Number
D≤0.10	*
0.10<D≤0.20	1 pc / dot or less 5 pcs / cell or less (Individual dot must secure 1/2 area or more)

No.	Parameter	Criteria
2	Black and White Spots With Gray Scale	Judge at the voltage which can be seen easily defect mode.

Zone / Dimension (mm)	Acceptable Number
D ≤ 0.3	Disregard
0.3 < D ≤ 0.6	3 (1pc within ϕ30mm)

D = (Long + Short) / 2 * : Disregard units : mm

<table>
<tr><th>No.</th><th>Parameter</th><th>Criteria</th></tr>
<tr><td>3</td><td>Black and White Spots, Foreign Substances</td><td>
(1) Round Shape
<table>
<tr><th rowspan="2">Zone
Dimension (mm)</th><th colspan="3">Acceptable Number</th></tr>
<tr><th>A</th><th>B</th><th>C</th></tr>
<tr><td>D ≤ 0.10</td><td>*</td><td>*</td><td>*</td></tr>
<tr><td>0.10< D ≤ 0.20</td><td>6</td><td>6</td><td>*</td></tr>
<tr><td>0.20< D ≤ 0.30</td><td>4</td><td>4</td><td>*</td></tr>
</table>
Individual dot must secure 1/2 area or more.

(2) Line Shape
<table>
<tr><th rowspan="2">Zone(
Length</th><th rowspan="2">Width</th><th colspan="3">Acceptable Number</th></tr>
<tr><th>A</th><th>B</th><th>C</th></tr>
<tr><td>*</td><td>W≤0.03</td><td>*</td><td>*</td><td>*</td></tr>
<tr><td>L ≤2.0</td><td>0.03<W≤0.05</td><td>5</td><td>5</td><td>*</td></tr>
<tr><td>L ≤1.0</td><td>0.05<W≤0.10</td><td>4</td><td>4</td><td>*</td></tr>
<tr><td>*</td><td>0.10<W</td><td colspan="2">In the same way (1)</td><td>*</td></tr>
</table>
No more than 9pcs as total.
(Refer to “Complex Foreign Substance Defects”)
</td></tr>
<tr><td>4</td><td>Color Variation</td><td>Not to be conspicuous defects.</td></tr>
<tr><td>5</td><td>Air Bubbles (between glass & polarizer)</td><td>
<table>
<tr><th rowspan="2">Zone
Dimension (mm)</th><th colspan="3">Acceptable Number</th></tr>
<tr><th>A</th><th>B</th><th>C</th></tr>
<tr><td>D ≤ 0.30</td><td>*</td><td>*</td><td>*</td></tr>
<tr><td>0.30< D ≤ 0.40</td><td>3</td><td>*</td><td>*</td></tr>
<tr><td>0.40< D ≤ 0.60</td><td>2</td><td>3</td><td>*</td></tr>
</table>
No more than 3pcs as total.
(Refer to “Complex Foreign Substance Defects”)
</td></tr>
<tr><td>6</td><td>Polarizer Scratches</td><td>Not to be conspicuous defects.</td></tr>
<tr><td>7</td><td>Polarizer Dirts</td><td>If the stains are removed easily from LCDP surface, the module is defective.</td></tr>
</table>

No.	Parameter	Criteria
8	Complex Foreign Substance Defects	Black spots, line shaped foreign substances or air bubbles between glass & polarizer should be 9pcs maximum in total.
9	Distance between Different Foreign Substance Defects	20mm or more C Zone: Disregard

11. Code System of Production Lot

The production lot of module is specified as follows.

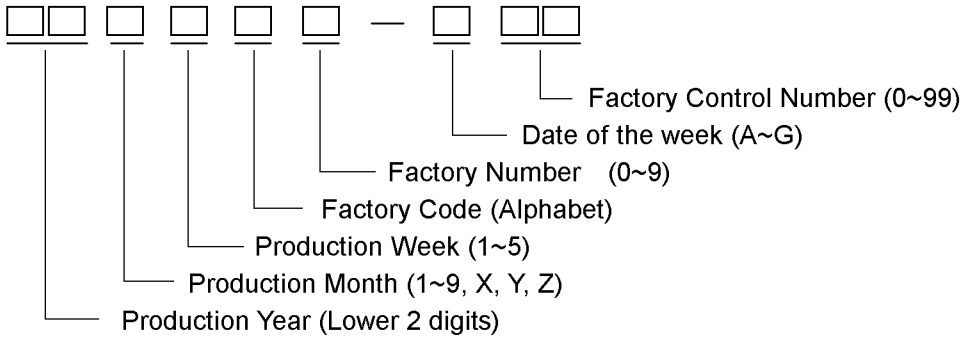

12. Type Number

The type number of module is specified as follows.

356015AF

13. Applying Precautions

Please contact us when questions and/or new problems not specified in this Specifications arise.

14. Precautions Relating Product Handling

The Following precautions will guide you in handling our product correctly.

1) Liquid crystal display devices
   1. The liquid crystal display panel used in the liquid crystal display module is made of plate glass. Avoid any strong mechanical shock. Should the glass break handle it with care.
   2. The polarizer adhering to the surface of the LCD is made of a soft material. Guard against scratching it.

2) Care of the liquid crystal display module against static electricity discharge.
   1. When working with the module, be sure to ground your body and any electrical equipment you may be using. We strongly recommend the use of anti static mats (made of rubber), to protect worktables against the hazards of electrical shock.
   2. Avoid the use of work clothing made of synthetic fibers. We recommend cotton clothing or other conductivity-treated fibers.
   3. Slowly and carefully remove the protective film from the LCD module, since this operation can generate static electricity.

3) When the LCD module must be stored for long periods of time:
   1. Protect the modules from high temperature and humidity.
      Conditions: Temperature: 0°C~40°C
      Humidity : Less than 60%RH
      No dew condensation to be observed.
   2. Keep the modules out of direct sunlight or direct exposure to ultraviolet rays.
   3. Protect the modules from excessive external forces.
   4. After a long period storage of the product (or LCD) under the low temperature and the dark, it might take a longer time to turn on the CCFL than normal.

4) Use the module with a power supply that is equipped with an overcurrent protector circuit, since the module is not provided with this protective feature.

5) Do not ingest the LCD fluid itself should it leak out of a damaged LCD module. Should hands or clothing come in contact with LCD fluid, wash immediately with soap.

6) Conductivity is not guaranteed for models that use metal holders where solder connections between the metal holder and the PCB are not used. Please contact us to discuss appropriate ways to assure conductivity.

7) For models which use CFL:
   1. High voltage of 1000V or greater is applied to the CFL cable connector area. Care should be taken not to touch connection areas to avoid burns.
   2. Protect CFL cables from rubbing against the unit and thus causing the wire jacket to become worn.
   3. The use of CFLs for extended periods of time at low temperatures will significantly shorten their service life.
   4. After storing the product (or LCD) under low temperature and/or in dark atmosphere for a long period of time, CCFL may take longer time to reach its specified brightness.

8) For models which use touch panels:
1. Do not stack up modules since they can be damaged by components on neighboring modules.
2. Do not place heavy objects on top of the product. This could cause glass breakage.

9) For models which use COG,TAB,or COF:
1. The mechanical strength of the product is low since the IC chip faces out unprotected from the rear. Be sure to protect the rear of the IC chip from external forces.
2. Given the fact that the rear of the IC chip is left exposed, in order to protect the unit from electrical damage, avoid installation configurations in which the rear of the IC chip runs the risk of making any electrical contact.

10) Models which use flexible cable, heat seal, or TAB:
1. In order to maintain reliability, do not touch or hold by the connector area.
2. Avoid any bending, pulling, or other excessive force, which can result in broken connections.

11) In case of buffer material such as cushion / gasket is assembled into LCD module, it may have an adverse effect on connecting parts (LCD panel-TCP / HEAT SEAL / FPC / etc., PCB-TCP / HEAT SEAL / FPC etc., TCP-HEAT SEAL, TCP-FPC, HEAT SEAL-FPC, etc.,) depending on its materials. Please check and evaluate these materials carefully before use.

12) In case of acrylic plate is attached to front side of LCD panel, cloudiness (very small cracks) can occur on acrylic plate, being influenced by some components generated from polarizer film. Please check and evaluate those acrylic materials carefully before use.

13) Flickering due to optical interference may occur by combination of a) LCD driving frame frequency decided by either internal oscillator in driver IC or external clock input by the customer and b) lighting frequency of either backlight or other light sources. Please evaluate enough at the environment of actual use, and decide the driving condition that does not cause flickering.

15. Warranty

This product has been manufactured to your company's specifications as a part for use in your company's general electronic products. It is guaranteed to perform according to delivery specifications. For any other use apart from general electronic equipment, we cannot take responsibility if the product is used in medical devices, nuclear power control equipment, aerospace equipment, fire and security systems, or any other applications in which there is a direct risk to human life and where extremely high levels of reliability are required. If the product is to be used in any of the above applications, we will need to enter into a separate product liability agreement.

1. We cannot accept responsibility for any defect, which may arise from additional manufacturing of the product (including disassembly and reassembly), after product delivery.

2. We cannot accept responsibility for any defect, which may arise after the application of strong external force to the product.

3. We cannot accept responsibility for any defect, which may arise due to the application of static electricity after the product has passed your company's acceptance inspection procedures.

4. When the product is in CFL models, CFL service life and brightness will vary according to the performance of the inverter used, leaks, etc. We cannot accept responsibility for product performance, reliability, or defect, which may arise.

5. We cannot accept responsibility for intellectual property of a third party, which may arise through the application of our product to your assembly with exception to those issues relating directly to the structure or method of manufacturing of our product.

6. We will not be held responsible for any quality guarantee issue for defect products judged as KYOCERA Display -origin in 2 (two) years from our production or 1(one) year from KYOCERA Display Group delivery which ever is shorter.
However, priority is given to the contents of the "part (product) basic contract document" concluded in both.